PODET C1EN_m PLAN DE COFRAJ. LUNGIME TRONSON L=1.60m / CULVERT C1EN_m SHUTTERING PLAN. LENGTH SECTION L=1.60m

VEDERE a–a/ a–a VIEW
Scara 1:20/ Scale 1:20

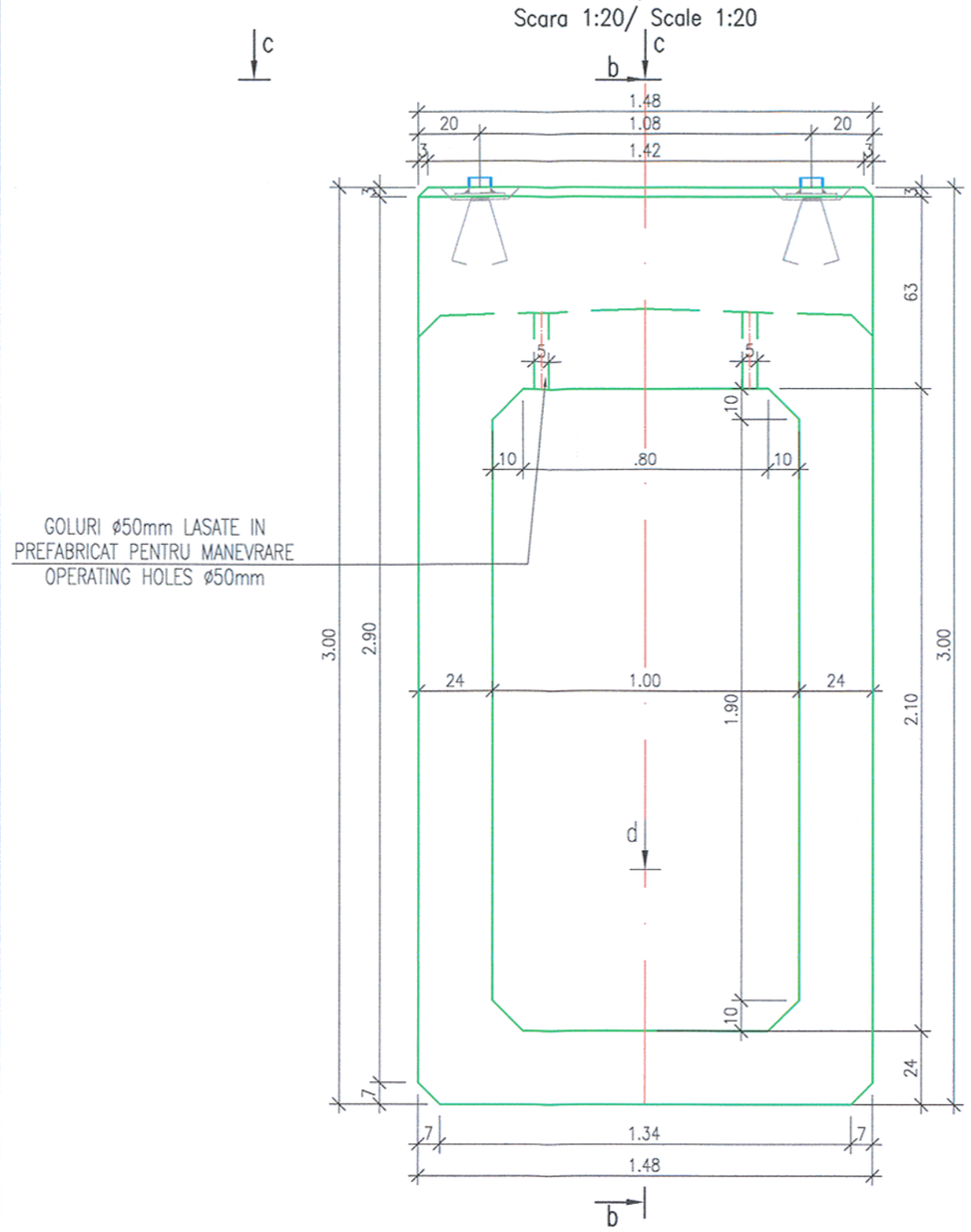

SECTIUNE b–b/ b–b SECTION
Scara 1:20/ Scale 1:20

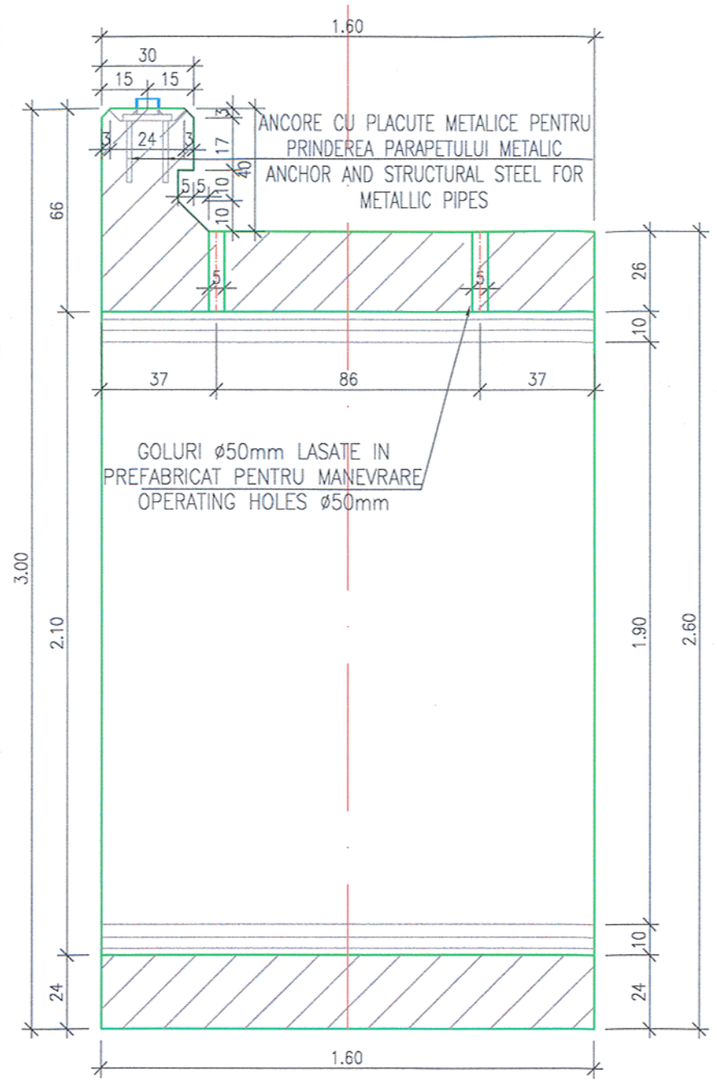

VEDERE c–c/c–c VIEW
Scara 1:20/ Scale 1:20

SECTIUNE d–d/d–d SECTION
Scara 1:20/ Scale 1:20

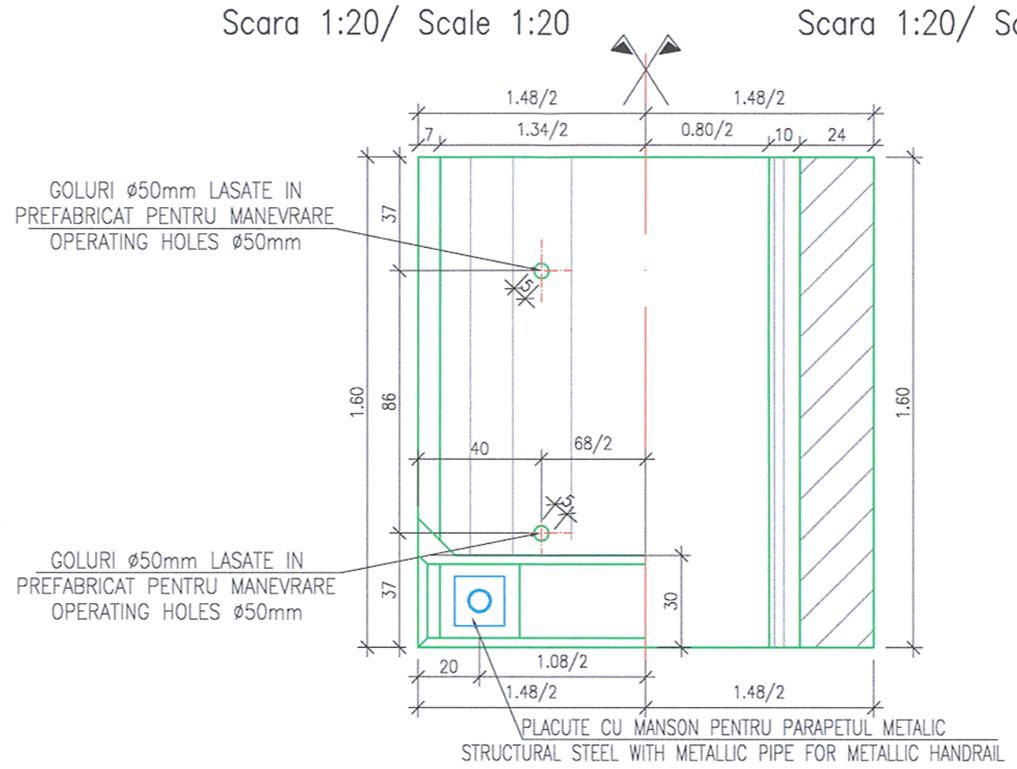

Domeniul de aplicabilitate
(NST–extrados)
Aliniament H=0.56÷5.00m
Curba H=0.56÷5.00m
Field of application
(NST – extrados)
Alignment H=0.56÷ 5.00m
Curve H=0.56÷5.00m
SCARA 1:100
SCALE 1:100

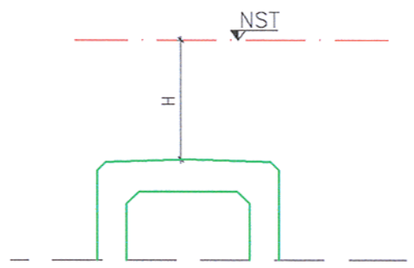

BETON:
C35/45
OTEL: PC 60;
STRAT DE ACOPERIRE 4.0cm

CONCRETE:
C35/45
STEEL: PC 60;
CONCRETE COVER LAYER 4.0cm

CARACTERISTICILE BETONULUI
C35/45–XC4,XD1,XF3(RO)–D_{max}22–S2–CEM IIA–S 42.5R–A/C=0.50–P^{8}_{10}

CONCRETE CHARACTERISTICS
C35/45–XC4,XD1,XF3(RO)–D_{max}22–S2–CEM IIA–S 42.5R–A/C=0.50–P^{8}_{10}

NOTA / NOTE
Acest plan este valabil pentru zone seismice cu acceleratie orizontala de varf ag≤0,16g.
This plan applies to seismic zones with top horizontal acceleration ag≤0,16g.

RĂCĂNEL I. IONUȚ RĂDU
ROMÂNIA MLPAT
Nr. 07330
A4, B2, D
INGINER VERIFICATOR PROIECTE

CARACTERISTICILE UNUI TRONSON PREFABRICAT TIP C1EN_m
LUNGIME TRONSON L=1.60m

VOLUM BETON	3.00 mc
GREUTATE	7.10 t
OTEL PC 60	371.00kg
COFRAJE	25.64mp

PREFABRICATED SECTION CHARACTERISTICS TYPE C1EN_m
LENGTH SECTION L=1.60m

CONCRETE VOLUME	3.00 mc
WEIGHT	7.10 t
REINFORCEMENT TYPE PC 60	371.00kg
CONCRETE FORMWORK	25.64mp

CONVOI DE CALCUL LM71
CALCULATION CONVOY LM71

Prezentul plan anuleaza si inlocuieste versiunea anterioara
This plan cancels and replaces previous version

Verificator / Expert Checker / Expert	Cerinta Requirement	Semnatura Signature	Referat / Expertiza Report / Expertise

European Investment Bank

MINISTERUL TRANSPORTURILOR

BENEFICIAR / BENEFICIARY :
CFR
COMPANIA NAȚIONALĂ DE CĂI FERATE "CFR" SA

PROIECTANT / DESIGNER: PÖYRY

			Data Date	Semnatura Signature
Aprobat Approved	Sef de echipa Team leader	C. Teodorescu	01.2013	
Verificat Checked	Expert Cheie Key Expert	R. Tudorascu	01.2013	
Subcontractant / Subcontractor	VIOTOP			
Aprobat Approved	Adjunct Sef de echipa Deputy Team leader	A.M. Baicu	01.2013	
Proiectat Designed	Inginer Engineer	F. Ioanidi	01.2013	

"Reabilitarea liniei c.f. Frontier ă - Curtici - Simeria, parte componentă a Coridorului IV Pan - European pentru circula ția trenurilor cu viteză maximă de 160 km/h" Tronsonul 3: Gurasada - Simeria

"Rehabilitation of the Railway Line Border - Curtici - Simeria, component Part of the IV Pan - European Corridor for the Trains Circulation with maximum speed of 160 km/h" Section 3: Gurasada - Simeria

Project 9i 35311.1

Faza / Phase: PTH+CS / TD+TS

Denumire desen / Drawing name:

PLAN COFRAJ CADRU TIP C1EN_m
SHUTTERING PLAN FRAME TYPE C1EN_m

Scara / Scale	Revizia / Revision	Cod desen / Drawing Code	Nr / No
1:20	1/05.2013	PT.03.02.00.PO.007	07

Format/Size: 420x590mm